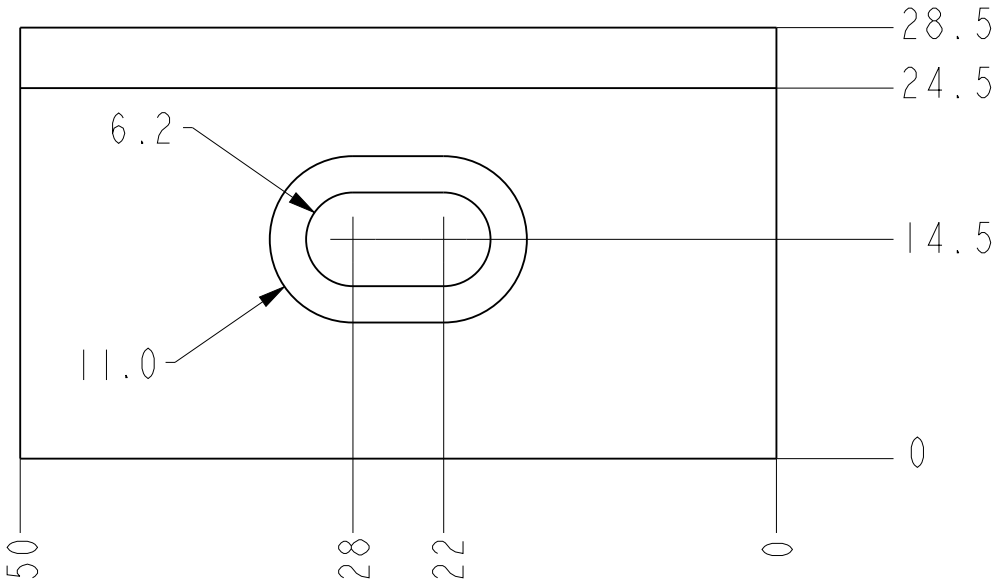

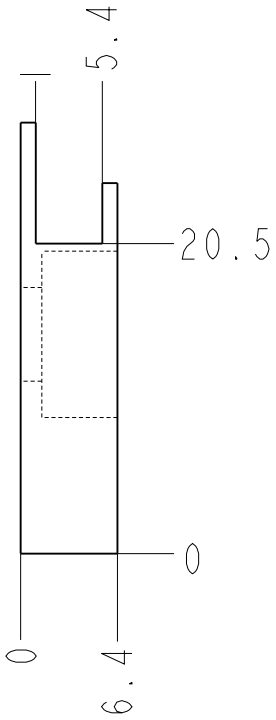

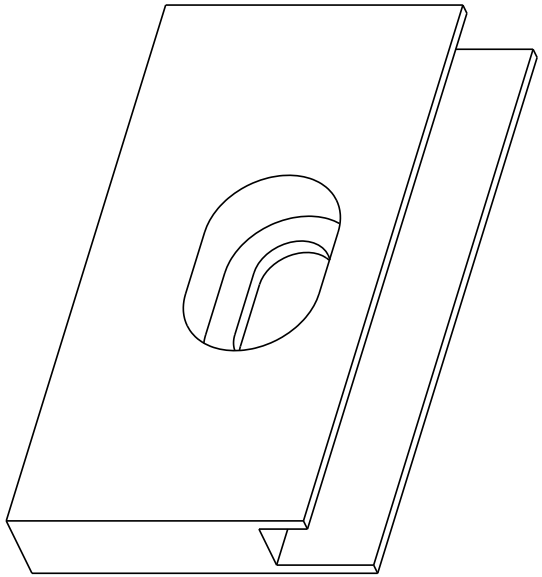

DRAWING PROJECTION		Oeabt Optics Experiment and Basic Teaching	
DATE	06/06/23		
EAP-OT50			
www.Oeabt.com	MATERIAL #		REV
COPYRIGHT© 2023 BY Oeabt			A
VALUSE IN PARENTHESIS ARE CALCULATED AND MAY CONTAIN ROUNDOFF ERRORS		APPROX WEIGHT	kg