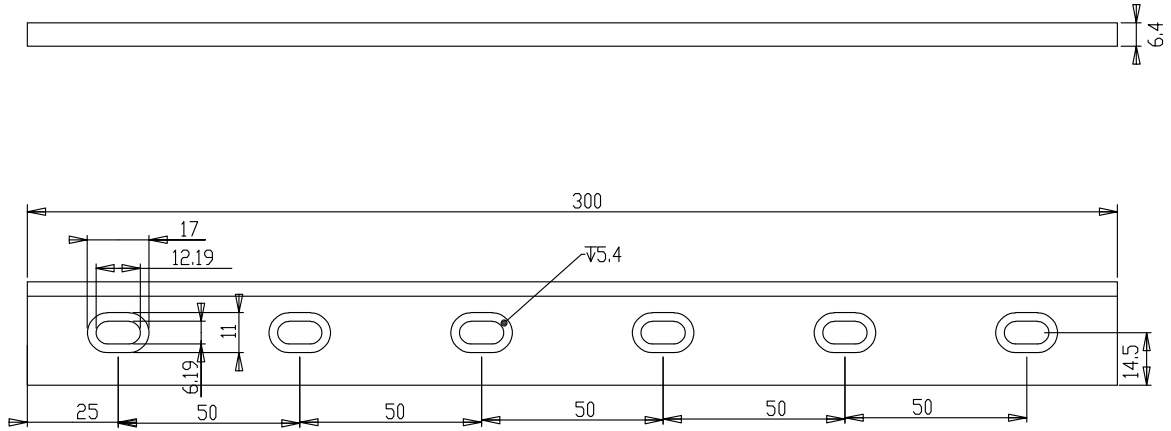

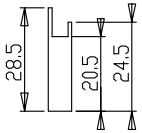

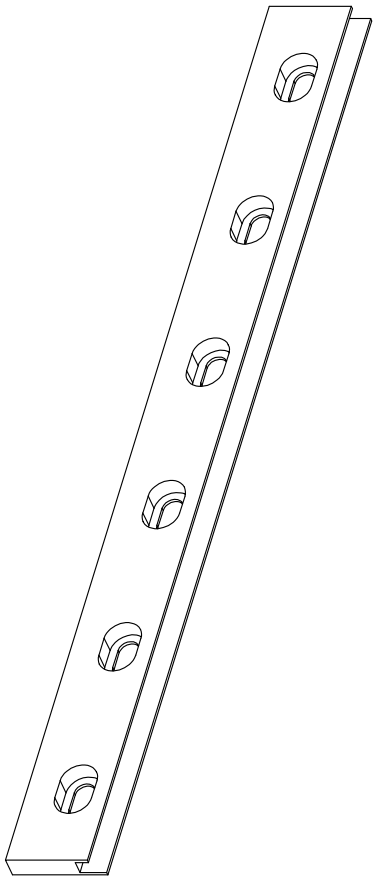

DRAWING PROJECTION		Oeabt Optics Experiment and Basic Teaching	
DATE	14/09/2022		
EAP-OT300			
www.Oeabt.com	MATERIAL #		REV
COPYRIGHT © 2022 BY Oeabt			A
VALUSE IN PARENTHESIS ARE CALCULATED AND MAY CONTAIN ROUNDOFF ERRORS		APPROX WEIGHT	kg