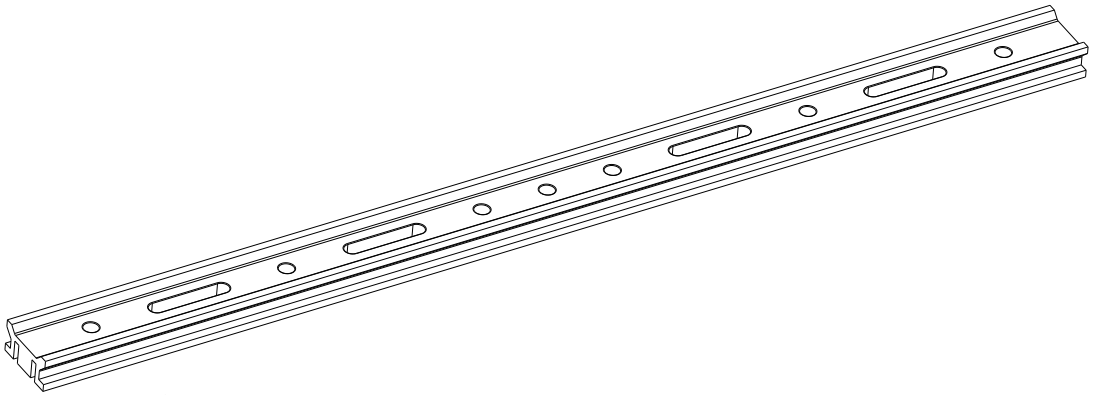

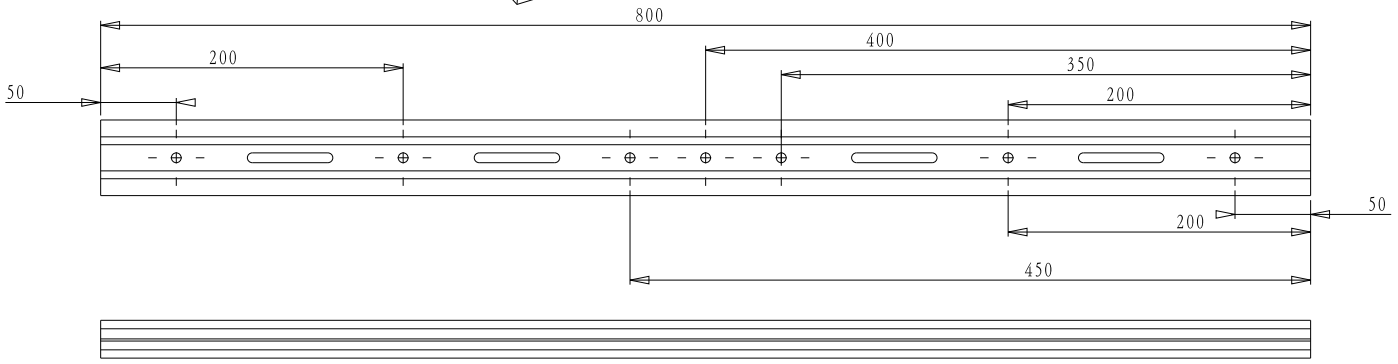

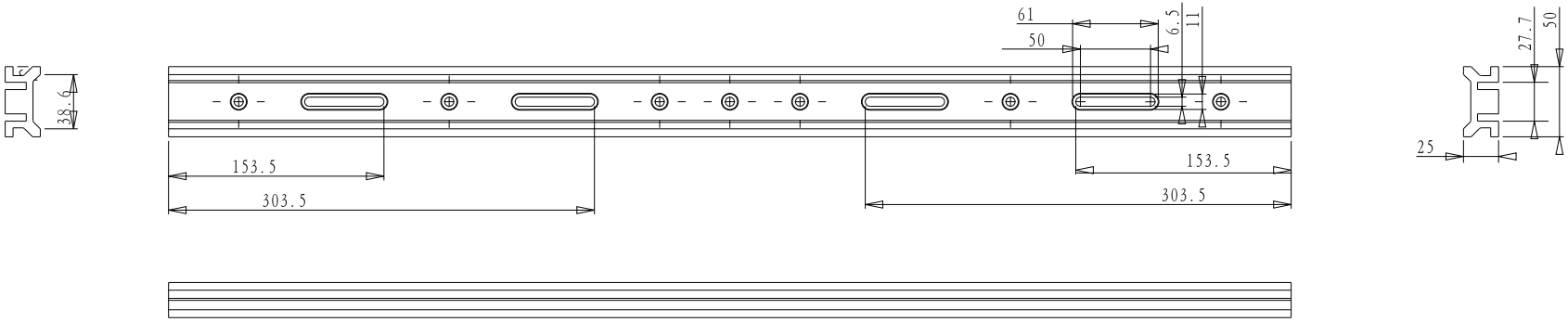

DRAWING PROJECTION		Oeabt Optics Experiment and Basic Teaching	
DATE	07/04/2021		
OOM-G800			
www.Oeabt.com	MATERIAL #		REV
COPYRIGHT ◎ 2021 BY Oeabt			A
VALUSE IN PARENTHESIS ARE CALCULATED AND MAY CONTAIN ROUNDOFF ERRORS		APPROX WEIGHT	kg