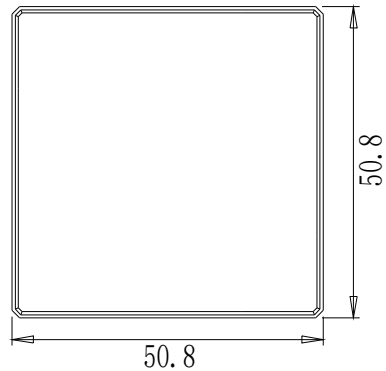

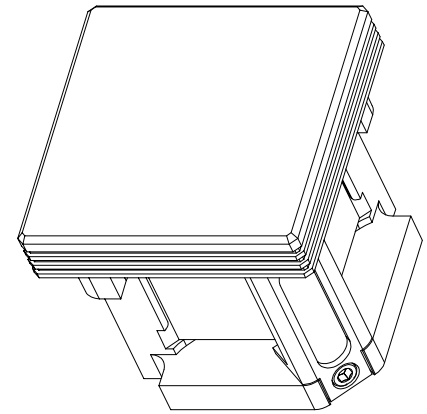

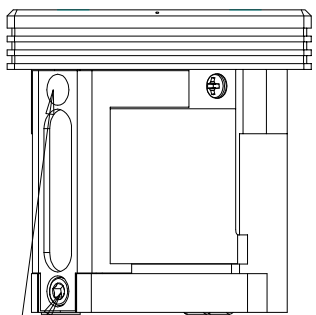

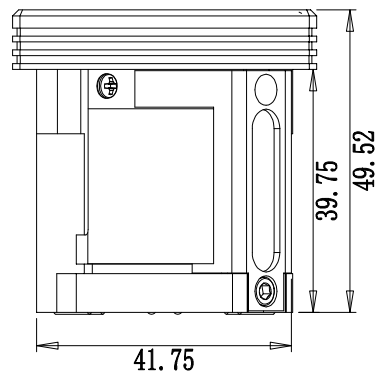

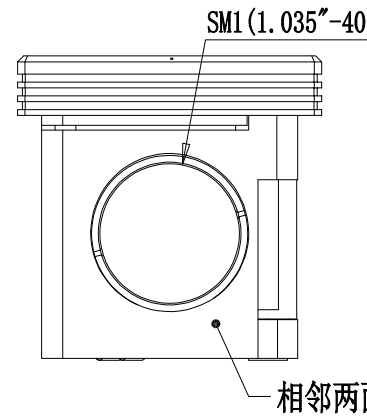

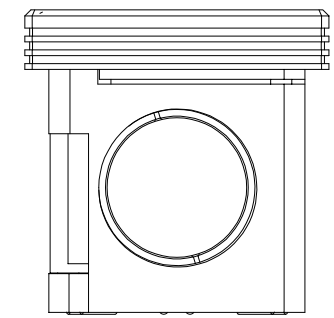

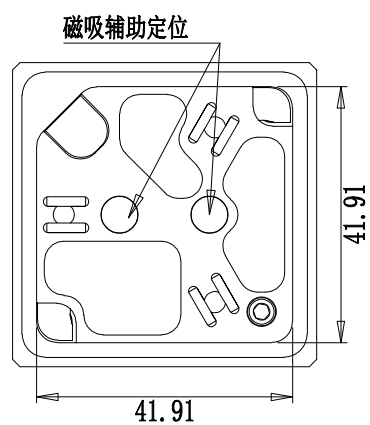

DRAWING PROJECTION		Oeabt Optics Experiment and Basic Teaching	
DATE	26/10/28		
BFD30			
www.Oeabt.com	MATERIAL #		REV
COPYRIGHT © 2026 BY Oeabt			A
VALUSE IN PARENTHESIS ARE CALCULATED AND MAY CONTAIN ROUNDOFF ERRORS		APPROX WEIGHT	kg