

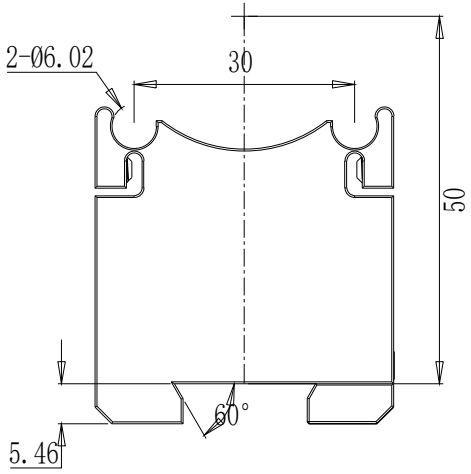

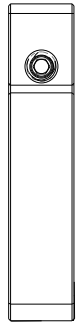

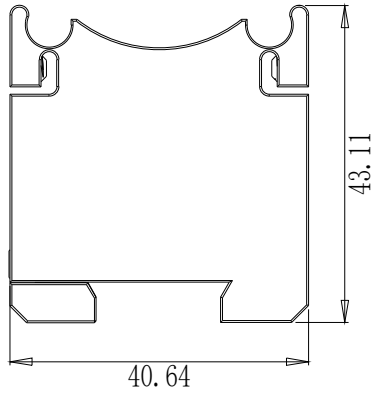



DRAWING PROJECTION		Oeabt Optics Experiment and Basic Teaching	
DATE	12/13/24		
LRA30-B2			
www.Oeabt.com	MATERIAL #		REV
COPYRIGHT ©2024 BY Oeabt			A
VALUSE IN PARENTHESIS ARE CALCULATED AND MAY CONTAIN ROUNDOFF ERRORS		APPROX WEIGHT	kg