



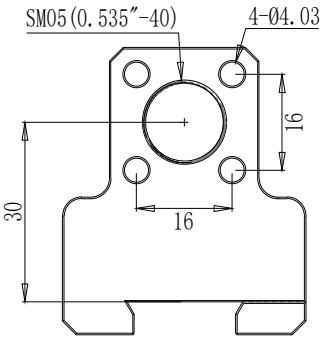

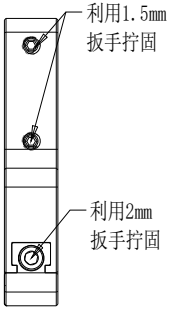

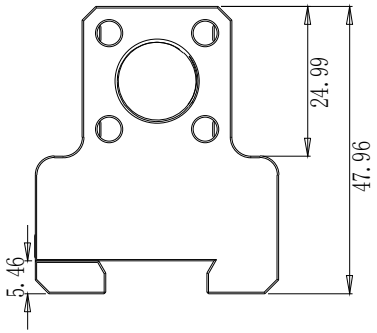

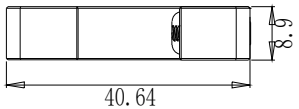

DRAWING PROJECTION		Oeabt Optics Experiment and Basic Teaching	
DATE	12/13/24		
LRA16_A			
www.Oeabt.com	MATERIAL #		REV
COPYRIGHT © 2024 BY Oeabt			A
VALUSE IN PARENTHESIS ARE CALCULATED AND MAY CONTAIN ROUNDOFF ERRORS		APPROX WEIGHT	kg