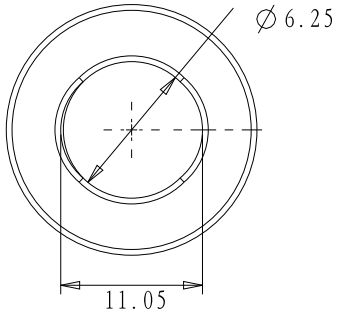

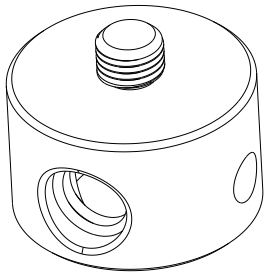

ITEM	M0
SCB1	4-40-UNC
SCB1A	M3X0.5

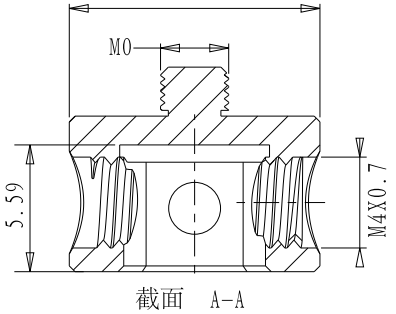

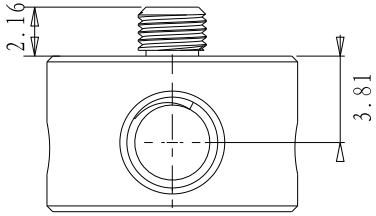

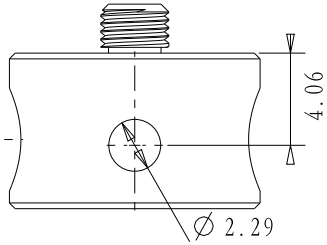

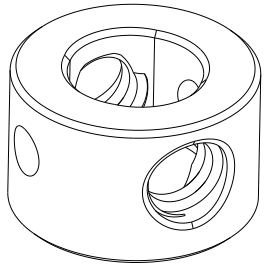

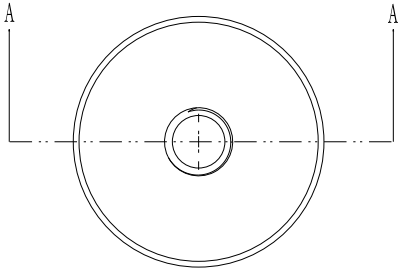

DRAWING PROJECTION		Oeabt Optics Experiment and Basic Teaching	
DATE	31/12/20		
SCB1系列			
www.Oeabt.com	MATERIAL #		REV
COPYRIGHT ◎ 2020 BY Oeabt			A
VALUSE IN PARENTHESIS ARE CALCULATED AND MAY CONTAIN ROUNDOFF ERRORS		APPROX WEIGHT	kg