

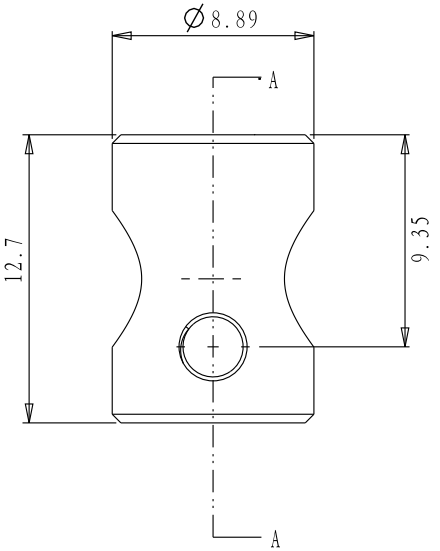

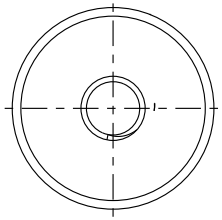

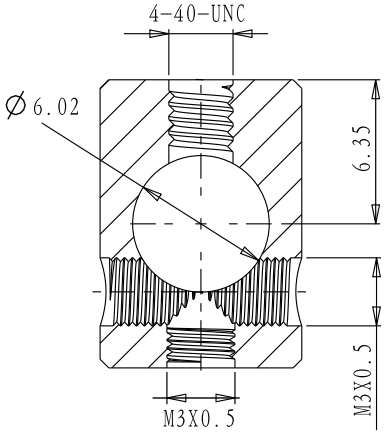

截面 A-A

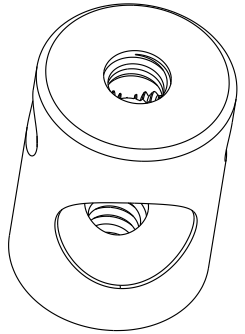

DRAWING PROJECTION		Oeabt Optics Experiment and Basic Teaching	
DATE	30/12/20		
SCB2			
www.Oeabt.com	MATERIAL #		REV
COPYRIGHT ◎ 2020 BY Oeabt			A
VALUSE IN PARENTHESIS ARE CALCULATED AND MAY CONTAIN ROUNDOFF ERRORS		APPROX WEIGHT	kg