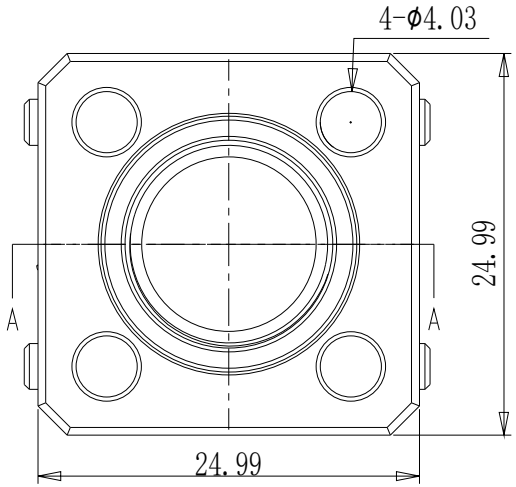


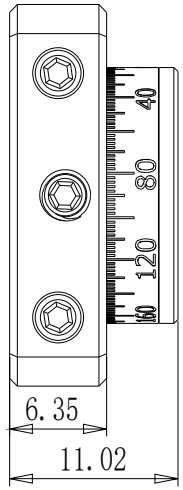


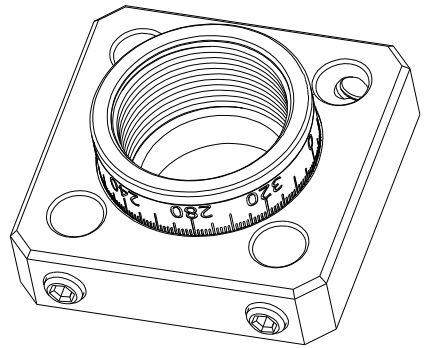

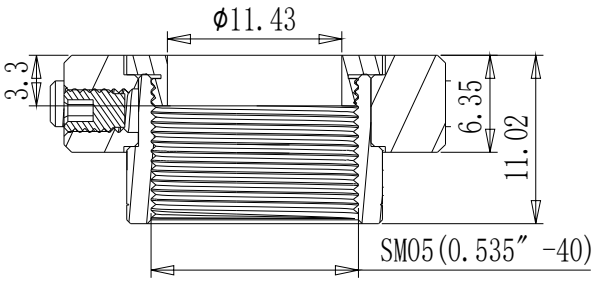


截面 A-A

| | | | |
|---|---|---|---|
| DRAWING PROJECTION | | Oeabt Optics Experiment and Basic Teaching | |
| DATE | 27/05/23 | | |
| CRD-05A | | | |
| www.Oeabt.com | MATERIAL # | | REV |
| COPYRIGHT ©2019 BY Oeabt | | | A |
| VALUSE IN PARENTHESIS ARE CALCULATED AND MAY CONTAIN ROUNDOFF ERRORS | | APPROX WEIGHT | kg |