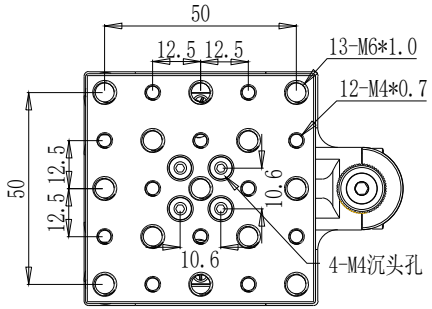

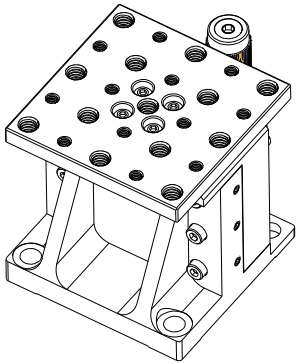

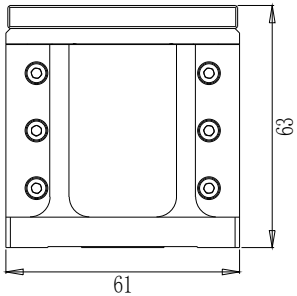

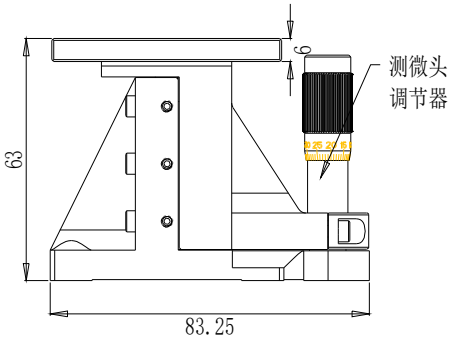

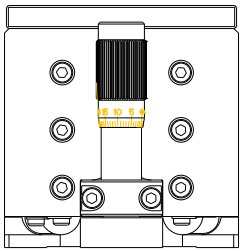

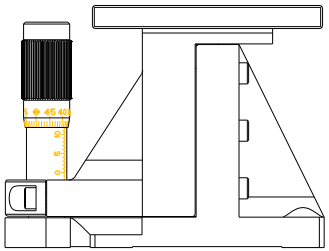

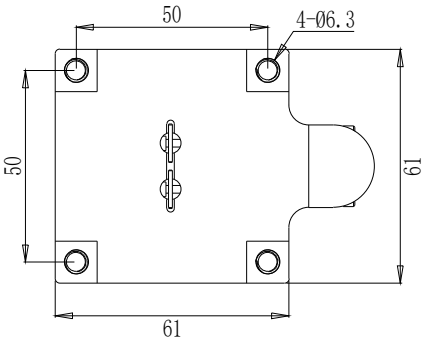

DRAWING PROJECTION		Oeabt Optics Experiment and Basic Teaching	
DATE	25/06/16		
VLT-Z			
www.Oeabt.com	MATERIAL #		REV
COPYRIGHT © 2025 BY Oeabt			A
VALUSE IN PARENTHESIS ARE CALCULATED AND MAY CONTAIN ROUNDOFF ERRORS		APPROX WEIGHT	kg