

PCAM-P12

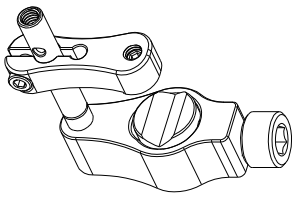

PCAM-V12

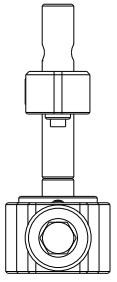

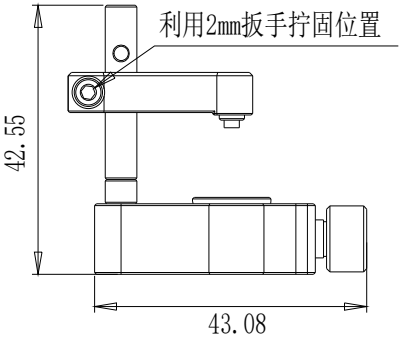

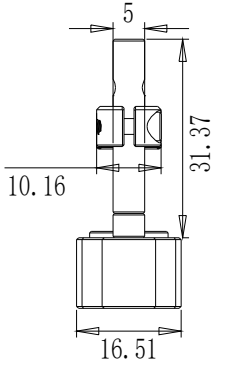

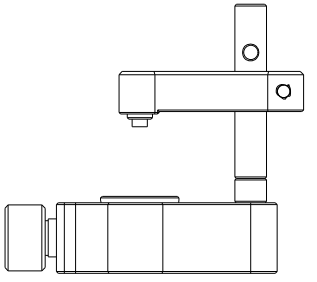

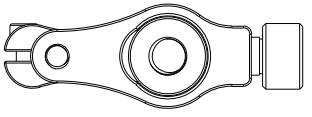

DRAWING PROJECTION		Oeabt Optics Experiment and Basic Teaching	
DATE	26/11/13		
PCAM系列			
www.Oeabt.com	MATERIAL #		REV
COPYRIGHT ©2026 BY Oeabt			A
VALUSE IN PARENTHESIS ARE CALCULATED AND MAY CONTAIN ROUNDOFF ERRORS		APPROX WEIGHT	kg