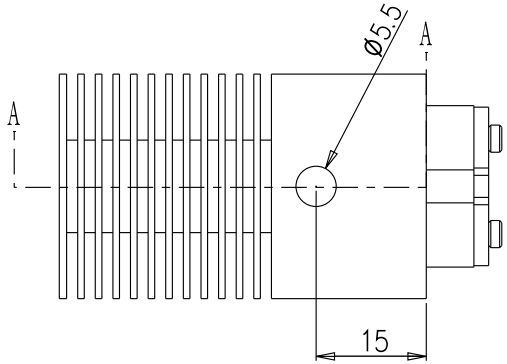

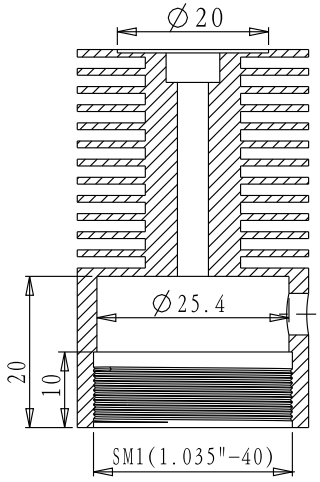

截面 A-A

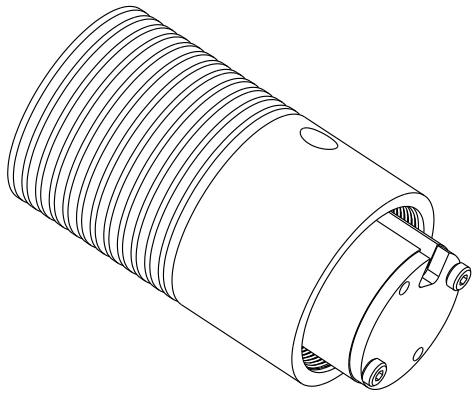

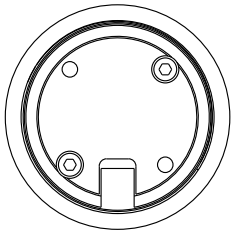

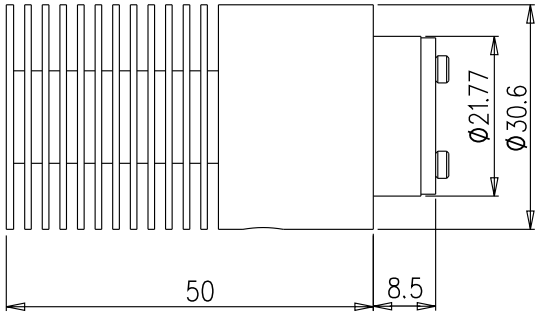

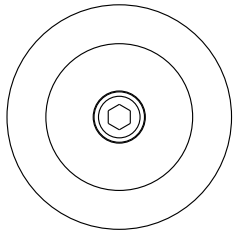

DRAWING PROJECTION		Oeabt Optics Experiment and Basic Teaching	
DATE	07/12/2022		
LED-D1系列			
www.Oeabt.com	MATERIAL #		REV
COPYRIGHT ◎ 2022 BY Oeabt			A
VALUSE IN PARENTHESIS ARE CALCULATED AND MAY CONTAIN ROUNDOFF ERRORS		APPROX WEIGHT	kg