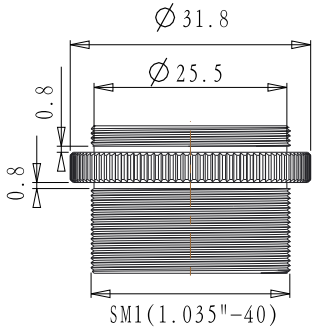

型号	L0
CSM1-1-12	12mm
CSM1-1-24	24mm
CSM1-1-48	48mm



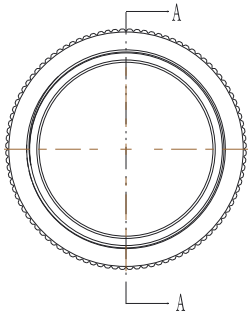

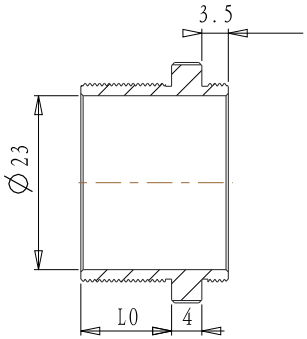

截面 A-A

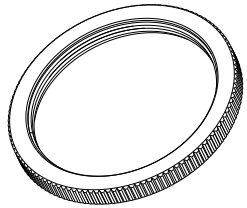

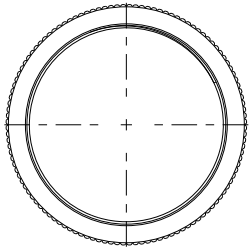

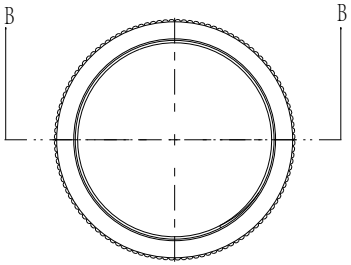

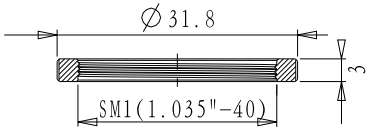

截面 B-B

DRAWING PROJECTION		Oeabt Optics Experiment and Basic Teaching	
DATE	18/02/2022		
CSM1-1系列			
www.Oeabt.com	MATERIAL #		REV
COPYRIGHT ◎ 2022 BY Oeabt			A
VALUSE IN PARENTHESIS ARE CALCULATED AND MAY CONTAIN ROUNDOFF ERRORS		APPROX WEIGHT	kg