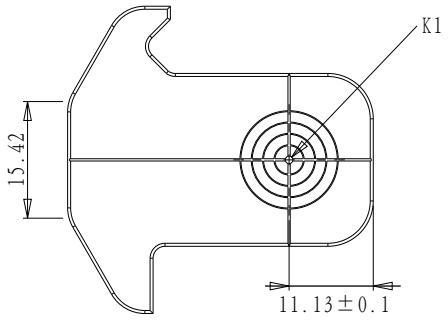

ITEM	K1
CPZ-S	0mm
CPZ-S1	1mm
CPZ -S2	2mm
CPZ-S3	2.5mm

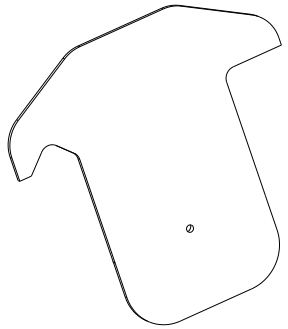

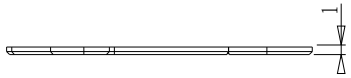

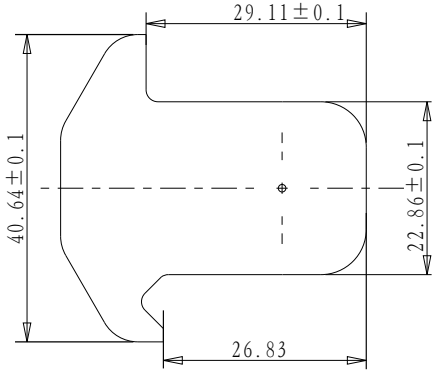

DRAWING PROJECTION		Oeabt Optics Experiment and Basic Teaching	
DATE	15/12/20		
CPZ-S系列			
www.Oeabt.com	MATERIAL #		REV
COPYRIGHT ◎ 2020 BY Oeabt			A
VALUSE IN PARENTHESIS ARE CALCULATED AND MAY CONTAIN ROUNDOFF ERRORS		APPROX WEIGHT	kg